HOLZ
Rubber Company, Inc.

RM-Holz™ Severe Duty Fabric Expansion Joints

Engineered for the Power Generation, Chemical and Processing Industries

Experience the Holz Difference

Helping Customers Unlock Value and Drive Excellence from Beginning to End

Holz Rubber is a leading supplier of fabric expansion joints serving the coal-fired power generation, gas turbine, marine, cement, incineration, nuclear, pulp & paper, refining, petrochemical, and general industrial markets.

Our commitment to research and development of high performance elastomers has led to a complete product offering to provide engineered solutions to the most severe air/gas handling applications.

Application-Matched Products

Our specially engineered compounds and construction techniques are directed at solving today's air and gas handling problems such as high acid concentrations, ammonia slip, ash accumulation and large movements.

Value-Added Customer Care and Fast Turnaround

Holz offers single point of contact from initial call to shipment in order to provide the highest level of customer satisfaction. Detailed construction drawings, dedicated engineering resources, field service, field supervision and proven material technology add up to a viable product designed correctly the first time and shipped on time to meet the most demanding construction schedules.

End to End Solutions

Holz has a complete product line to meet any application ranging from Economizers to Stack Breeching ducts. Our compounds include Neoprene, Chlorobutyl, EPDM, FKM, PTFE and Alloy foil barriers to meet any temperature or chemical challenge.

Our reinforcement materials include alloy wire, fiberglass, aramid, polyester and flame retardant meta-aramids in either knitted or woven constructions. Insulating materials utilized for high temperature applications include engineered coated fabrics, needled fiberglass, silica and ceramic blankets. Our complete line of sealing technologies coupled with thermal management products unite to create the most flexible, cost effective and longest lasting expansion joints on the market today.

Available Materials

Chloroprene (CR) - More commonly recognized as neoprene and is made using chlorine and butadiene. Expansion joints constructed using CR are very resistant to oils, greases and many other petroleum based products. CR has excellent ozone and weather resistance along with enhanced abrasion and impact properties. Upper temperature limit is 250 F. CR been utilized in power generation applications since 1960.

Ethylene Propylene (EPDM) - A low cost, high performance compound with excellent ozone, oxygen and chemical resistance including ammonia and mild acids. EPDM can operate at 300 F constant and has excellent low temperature resistance.

Chloronated Isobutylene Isoprene (CIIR) - Most commonly termed Chlorobutyl, is inherently resistant to ozone and oxidizing chemicals including some mineral acids and ketones. CIIR has good tensile strength, elongation, dampening characteristics and low gas permeability. Can operate at 300 F constant temperature.

Fluoroelastomers (FKM) - Manufactured in the U.S.A. by DuPont (Viton®) and Dyneon (Fluorel®). This family of elastomers have outstanding resistance to chemicals, oils, and heat compared other elastomers. FKM is excellent for high acid conditions typically found from the air heater to stack and are acceptable for use where low concentrations of ammonia are possible due to ammonia slip (<10ppm). 400F operating and 750 F excursion.

Silicone (SL) - Silicone has poor resistance to chemical environments and wet conditions and should not be used in any flue gas application. Silicone should be restricted to hot dry applications to 500 F only.

Fluoroplastics (PTFE) are a family of compounds that have excellent heat and chemical resistance. Based on the coating technique and film thickness, these materials can be zero porosity and have the ability to resist chemical attack in the harshest environments. Upper temperature of 575 F constant operating.

Note: Fluoroplastics require a flow deflector in most cases and should not be used as a stand-alone solution due to weaknesses associated with vibration and flutter in coal-fired flue gas applications.

Thermal growth, seismic and wind loading all contribute to the need for expansion joints. Holz engineers design for a variety of scenarios which often include axial, lateral, angular and torsional movements concurrently. System design can often be altered to reduce the number of expansion joints within the ducting and still allow for all design and excursion movements expected. The below illustrations show movement specifics encountered in air/gas handling equipment.

Types of Movement

Axial Compression - The dimensional shortening of the expansion joint face-to-face gap parallel to its longitudinal axis.

Axial Extension - The dimensional lengthening of the expansion joint face-to-face gap parallel to its longitudinal axis.

Lateral - The dimensional displacement of the inlet and the outlet flanges of the expansion joint perpendicular to its longitudinal axis.

Torsional Rotation - The twisting of one end of the expansion joint with respect to the other end about its longitudinal axis.

Angular Rotation - That movement which occurs when one flange of the expansion joint is moved to an out-of-parallel position with the opposite flange.

Vibration - The rapid, small movements, back and forth hat can occur in any single plane or multi-planes.

TYPE	ACTIVE LENGTH	AXIAL COMPRESSION		AXIAL EXTENSION	RESULTANT LATERAL		MINIMUM SETBACK	
		OPERATING	EXCURSION	OPERATING	OPERATING	EXCURSION	FLANGED	BELT
BELT STYLE ELASTOMERIC EXPANSION JOINTS								
300-LT 400-LT	6" (150mm)	1" (25mm)	2" (50mm)	1" (25mm)	1" (25mm)	2" (50mm)	2-1/2 (64mm)	6" (152mm)
	9" (230mm)	2-1/4" (57mm)	4-1/4" (108mm)	1" (25mm)	2-1/4" (57mm)	3-3/4" (96mm)	3-1/2 (89mm)	6" (152mm)
	12" (305mm)	3-1/4" (83mm)	6" (152mm)	1" (25mm)	3-1/4" (83mm)	5" (127mm)	4-1/2 (114mm)	6" (152mm)
	16" (405mm)	5" (127mm)	8-1/2" (216mm)	1" (25mm)	5" (127mm)	7" (178mm)	5-1/2 (140mm)	8" (203mm)
FLANGED ELASTOMERIC EXPANSION JOINTS								
300-LT 400-LT	6" (150mm)	1" (25mm)	2" (50mm)	1" (25mm)	1" (25mm)	2" (50mm)	2-1/2 (64mm)	6" (152mm)
	9" (230mm)	2-1/4" (57mm)	4-1/4" (108mm)	1" (25mm)	2-1/4" (57mm)	3-3/4" (96mm)	3-1/2 (89mm)	6" (152mm)
	12" (305mm)	3-1/4" (83mm)	6" (152mm)	1" (25mm)	3-1/4" (83mm)	5" (127mm)	4-1/2 (114mm)	6" (152mm)
	16" (405mm)	5" (127mm)	8-1/2" (216mm)	1" (25mm)	5" (127mm)	7" (178mm)	5-1/2 (140mm)	8" (203mm)
HIGH TEMPERATURE COMPOSITE EXPANSION JOINTS								
500-HT	6" (150mm)	1" (25mm)	CONTACT HOLZ	1" (25mm)	CONTACT HOLZ	1/2" (13mm)	CONTACT HOLZ	6" (152mm)
600-HT	9" (230mm)	2" (50mm)	CONTACT HOLZ	1" (25mm)	CONTACT HOLZ	1" (25mm)		6" (152mm)
700-HT, 800-HT	12" (305mm)	3" (75mm)	CONTACT HOLZ	1" (25mm)	CONTACT HOLZ	1-1/2" (38mm)		6" (152mm)
1000-HT, 1200-HTG	16" (405mm)	4" (100mm)	CONTACT HOLZ	1" (25mm)	CONTACT HOLZ	2" (50mm)		8" (203mm)

Flue Gas Desulphurization (FGD)

Flue gas desulphurization is one of the most challenging applications for expansion joints. The nature of the process is inherently detrimental to most of the common expansion joint designs primarily due to the "wet" atmosphere found on the inlet and outlet locations and the possibility of pressure fluxuations from slightly positive to slightly negative caused by stack draft during specific weather conditions.

Typical expansion joint designs create a cavity that often fills with acidic liquid. This liquid quickly works to penetrate the edges of the flex element and slowly begins to degrade the bond between the reinforcement plies and the elastomer. This process eventually causes the inner ply of the flex element to bubble and separate from the reinforcement layer and weakens the tensile strength of the reinforcement layers. This ultimately leads to the complete deterioration of the expansion joint even with the addition of a drain plug for removing the liquid.

Holz has spent many years in the development of a product suitable for long-term use in this harsh environment. Our specially designed FGD flex element utilizes a robust FKM outer flex element resistant to aggressive acids and proven to provide integrity against pressure shifts up to 5psig along with a zero porosity PTFE barrier acting as the inner gas seal.

The combination of advanced materials insures long life and predictable performance. Contact Holz Engineering for more details about specific applications.

Typical Applications

300-LT expansion joints can be used in wet or dry service up to 400 F and 5psig. 300-LT can be manufactured from Neoprene, EPDM or Chlorobutyl rubber and is reinforced with single of multiple layers of woven fabric or knitted wire.

300-LT expansion joints are typically found on baghouses, FD fans, wet or dry scrubbers and precipitators. 300-LT expansion joints are offered in either belt or flanged configurations and are designed to operate without a flow liner except where abrasion or high velocity flow is anticipated. 300-LT expansion joints are designed to allow external insulation over the flex element if desired.

400-LT can be used in wet or dry service up to 400F and 5psig. 400-LT is constructed using FKM rubber and is reinforced with a single of multiple layers of woven fabric or knitted wire. An additional FEP or PTFE gas barrier can also be added for increased chemical resistance especially in applications where ammonia slip is expected.

400-LT expansion joints are typically found on air heater gas outlets, baghouses, precipitators, induced draft fans, wet or dry scrubbers and stack breeching ducts. 400-LT can also see excursion temperatures up to 750F in the case of air heater failure for a short duration without permanent damage to the elastomer.

400-LT expansion joints are offered in either belt or flanged configurations and are designed to operate without a flow liner except where heavy abrasion is anticipated. 400-LT expansion joints are designed to allow external insulation over the flex element if desired.

500-T expansion joints are for use in wet or dry service up to 575F and 5psig. 500-T is constructed from fiberglass reinforced PTFE with a zero porosity gas barrier of varying thickness ranging from 5mils to 30mils mechanically bonded to the substrate.

The 500-T is primarily used to provide the outer cover and gas seal for high temperature composites but also can be used in extreme chemical service as the primary flex element or inner gas seal. 500-T can be found on applications ranging from paper processing liquors to wet scrubbers and economizer outlets as part of multi-layer solution.

500-T expansion joints require a flow liner in most cases if used a single layer solution. Please contact Holz engineering regarding specific design considerations.

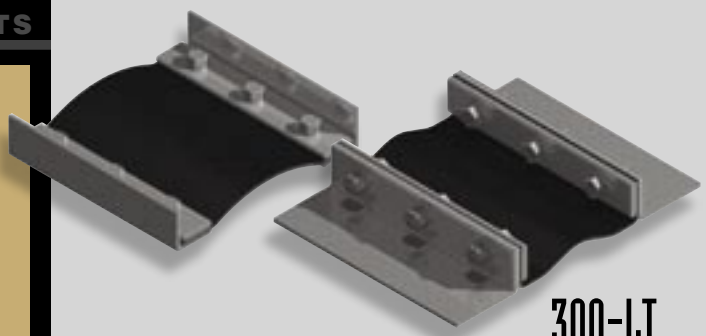

300-LT

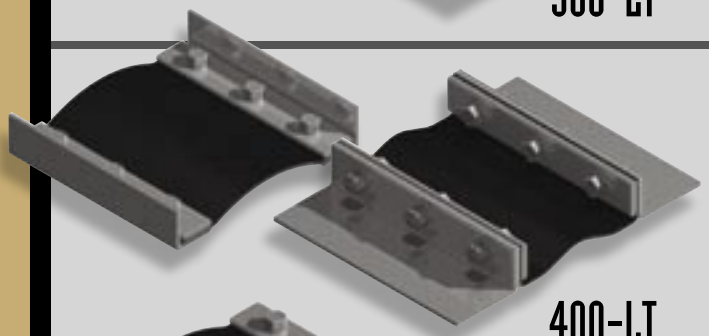

400-LT

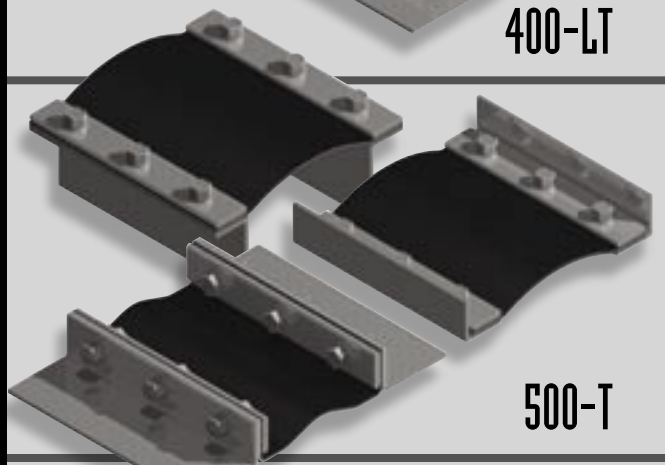

500-T

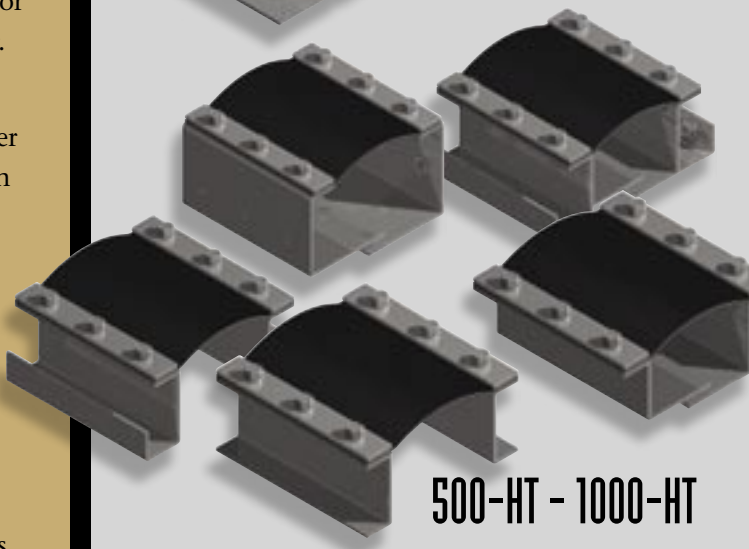

500-HT - 1000-HT

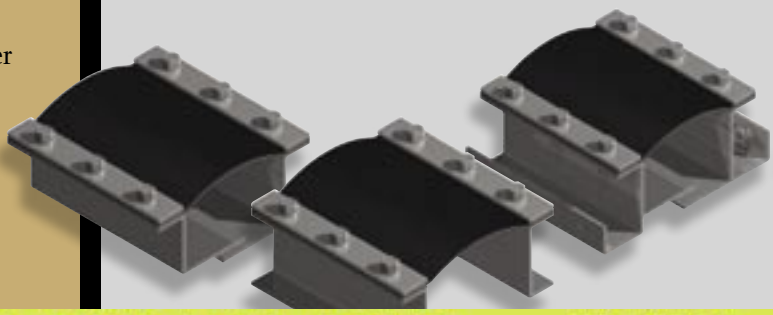

500-HT-1000-HT expansion joints are for use in high temperature air or gas applications up to 750F and 2psig as without an insulation pillow and up to 1000F with a 4" thick insulation pillow. The HT product line is manufactured from multiple layers based on design temperature requirements and utilizes components including a gas seal, insulation, woven fabric, and possibly knitted wire. The gas barrier can be constructed using several different materials including EPDM, FKM, PTFE or metal alloys based on design conditions.

In applications where gas dew point is a concern, Holz can provide a primary gas seal within the flex element to limit chemical exposure and provide a longer lasting expansion joint. HT expansion joints can be found on economizer outlets, SCR inlets, secondary air, and other hot flue gas applications. HT expansion joints require a flow liner and should not be externally insulated unless the external temperature is below 500F.

1200-HTG expansion joints are specifically designed for gas turbine applications where temperature is above 1000F and heavy cycling, radial growth, hot spots and large movements are expected. HTG joints are designed to provide long life, easy installation, low external temperatures and reduced noise. HTG joints can be found on GT exhausts, HRSG inlets and other high temperature applications.

Holz has the capability to design utilizing various high temperature frame alloy materials, wash-down environments, and all popular connection types including hot-hot, cold-cold and/or hot-cold. Please consult Holz engineering for specific design requirements.

HOLZ PRODUCT	RECOMMENDED CONSTRUCTION			FLUE GAS TEMPERATURE		MAX TEMPERATURE DURATION LIMITS		SERVICE
	TYPE	CONSTRUCTION	MATERIAL	OPERATING °F	EXCURSION °F	SINGLE OCCURRENCE (Hours)	MAXIMUM CUMULATIVE (Hours)	
300-LT	ELASTOMERIC	BELT OR FLANGED	EPDM/Chlorobutyl	300	350	4	100	WET/DRY
					450	2	3000	WET/DRY
			FKM/ARAMID		500	2	1000	
			OR		550	2	240	
400-LT	ELASTOMERIC	BELT OR FLANGED	FKM/GLASS	400	600	2	48	
			OR		650	1	8	
			FKM/WIRE		700	1	4	
					750	1/2	2	
500-T	FLUOROPLASTIC	BELT OR FLANGED	PTFE/FG	575	650	1	100	WET/DRY
500-HT	COMPOSITE	BELT	COVER: EPDM	500	CONSULT HOLZ ENGINEERING			DRY/CYCLE DEW POINT
600-HT	COMPOSITE	BELT	COVER: EPDM	600	CONSULT HOLZ ENGINEERING			DRY/CYCLE DEW POINT
700-HT	COMPOSITE	BELT	COVER: PTFE, FKM	700	CONSULT HOLZ ENGINEERING			DRY/CYCLE DEW POINT
800-HT	COMPOSITE	BELT	COVER: PTFE, FKM	800	CONSULT HOLZ ENGINEERING			DRY/CYCLE DEW POINT
1000-HT	COMPOSITE	BELT	COVER: PTFE, FKM	1000	CONSULT HOLZ ENGINEERING			DRY/CYCLE DEW POINT
1200-HTG	COMPOSITE	BELT	COVER: PTFE, FKM	1200	CONSULT HOLZ ENGINEERING			DRY/CYCLE DEW POINT

Temperature Design Standards

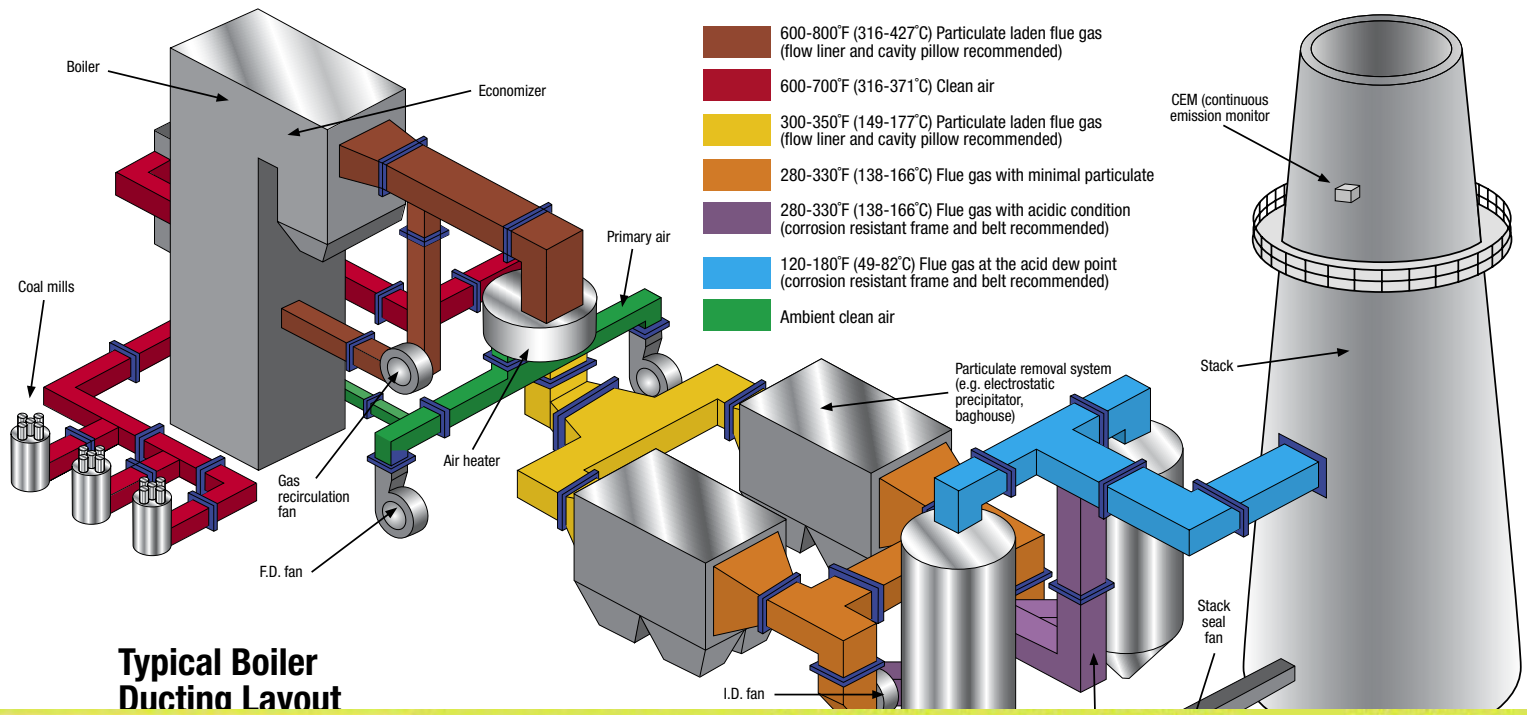

Typical Boiler Ducting Layout

HOLZ Rubber Company, Inc.

More Than 70 Years of Precision Industrial Elastomeric Manufacturing Experience

For more than 70 years customers around the globe have relied on Holz Rubber for polymer engineering and manufacturing expertise. Why? They know that nobody knows more about applying polymer science to solve their application-specific challenges.

They also know that Holz Rubber's in-plant capabilities range from compound development and the design and machining of production tooling, to curing and strict quality control. Using this unique "vertical integration" approach in which Holz controls each facet of the manufacturing process, ensures unsurpassed product quality.

And, they are keenly aware of Holz's reputation for providing exceptional engineering expertise and high quality manufacturing at the lowest possible prices.

Our Vision:

Where all customers experience the difference through world-class service, quality, value and innovation.

Mission:

We will exceed customers' expectations through world-class manufacturing and distribution.

We work together to meet customer needs and innovate solutions. We focus on safety, efficiency, productivity, managed growth, and fiscal responsibility.

Values:

At Holz Rubber Company, we value:
Safety
Integrity
Relationships
Responsibility
Optimism

HOLZ RUBBER COMPANY, INC.
1129 S. Sacramento Street
Lodi, California 95240
United States and Canada
Phone: 800-285-1600
Fax: 800-756-9998
Outside Of United States
Phone: 209-368-7171
Fax: 209-368-3246