Heads-are precision machined from aluminum, then hard-coat anodized and PTFE impregnated to ensure long seal life and low breakaway pressure.

Body - is machined from a one-piece aluminum extrusion that incorporates the stator for superior rigidity. The extrusion is hard-coat anodized and PTFE impregnated, resulting in a smooth, slick seal surface which guarantees long seal life and low breakaway pressure.

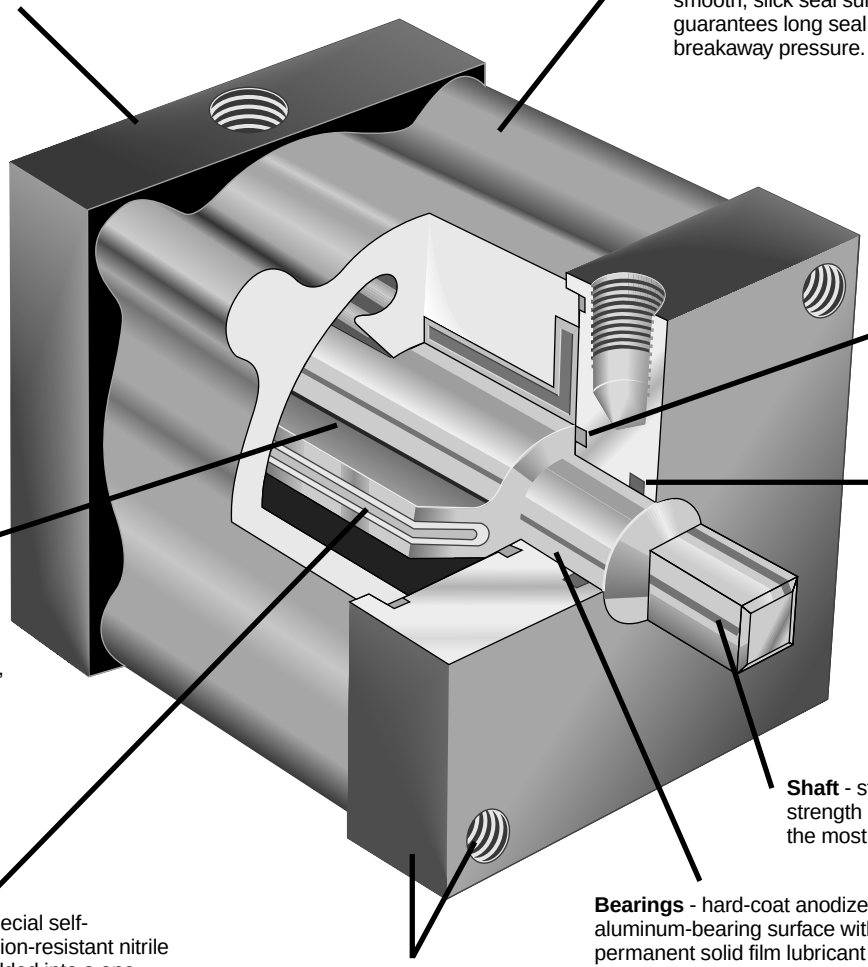

Shoulder Seal - a nitrile-energized, PTFE seal is used to reduce bypass flow and friction, providing superior performance and long life.

Shaft Seal - the high-quality, self-lubricated, abrasion-resistant nitrile seal is a multiple lobe construction for leakfree operation and greater reliability.

Vane - a hard-coat anodized aluminum extrusion perma-nently affixed to shaft, forming a structurally sound assembly. The light weight also reduces inertia allowing faster operating speeds.

Shaft - stainless steel provides high strength and corrosion resistance for the most demanding applications.

Vane Seal - a special self-lubricated, abrasion-resistant nitrile compound is molded into a one-piece vane seal, providing low breakaway pressure and long life, even with no lubrication. The vane seal is also removable so that field repairs can be made, if necessary.

Mounting - combination face and base mounting offer flexibility in application and design.

Bearings - hard-coat anodized aluminum-bearing surface with permanent solid film lubricant provides substantial shaft support and wear resistance, ensuring continuous lubrication, high performance, and long life.

J

GOODYEAR RUBBER PRODUCTS INC.
Call Toll Free: 1-866-711-4673
WebSales@GoodyearRubberProducts.com
We Ship World Wide